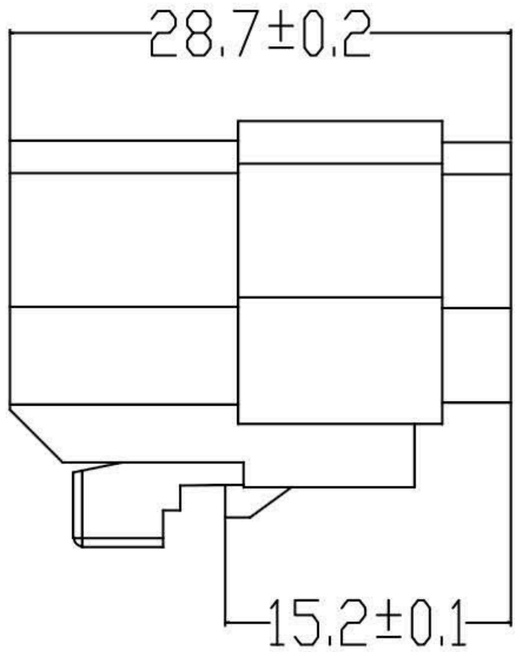


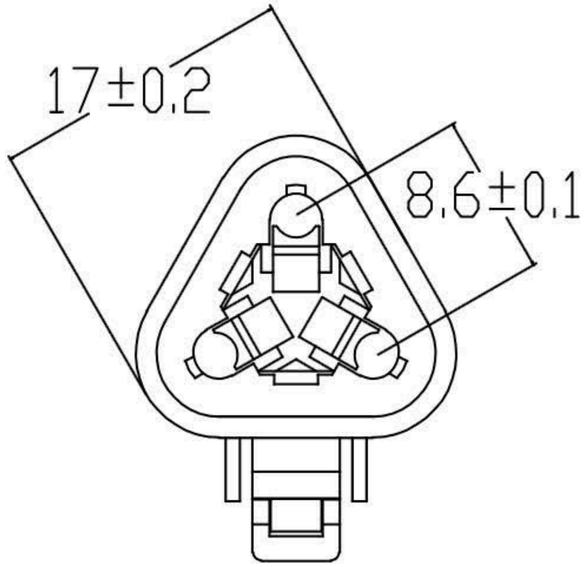


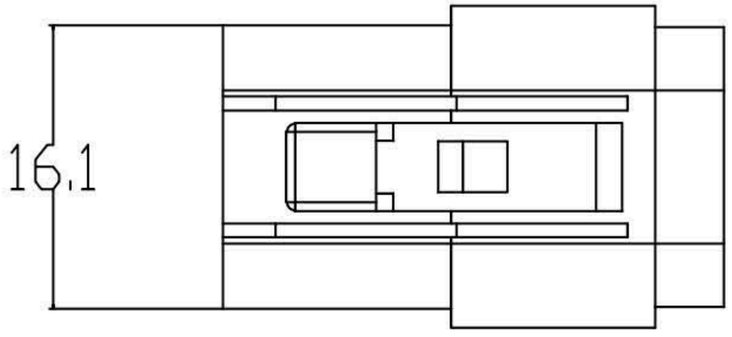


BDIVERSE
Supply chain improvement & entrepreneurship

| | | | | | | | | |
|---|---|---|---|---|---|---|---|---|
| | | | | | | Material serial number | DT04-3S | Material PA66 |
| | | | Draw | 郑建兴 | 2018.5.23 | | Scale | |
| | | | | | | | 1:1 | |
| Checked | 阮旭勇 | 2018.5.23 | | | | | | |
| | | | Approved | 吴鹏辉 | 2018.5.23 | | View | |

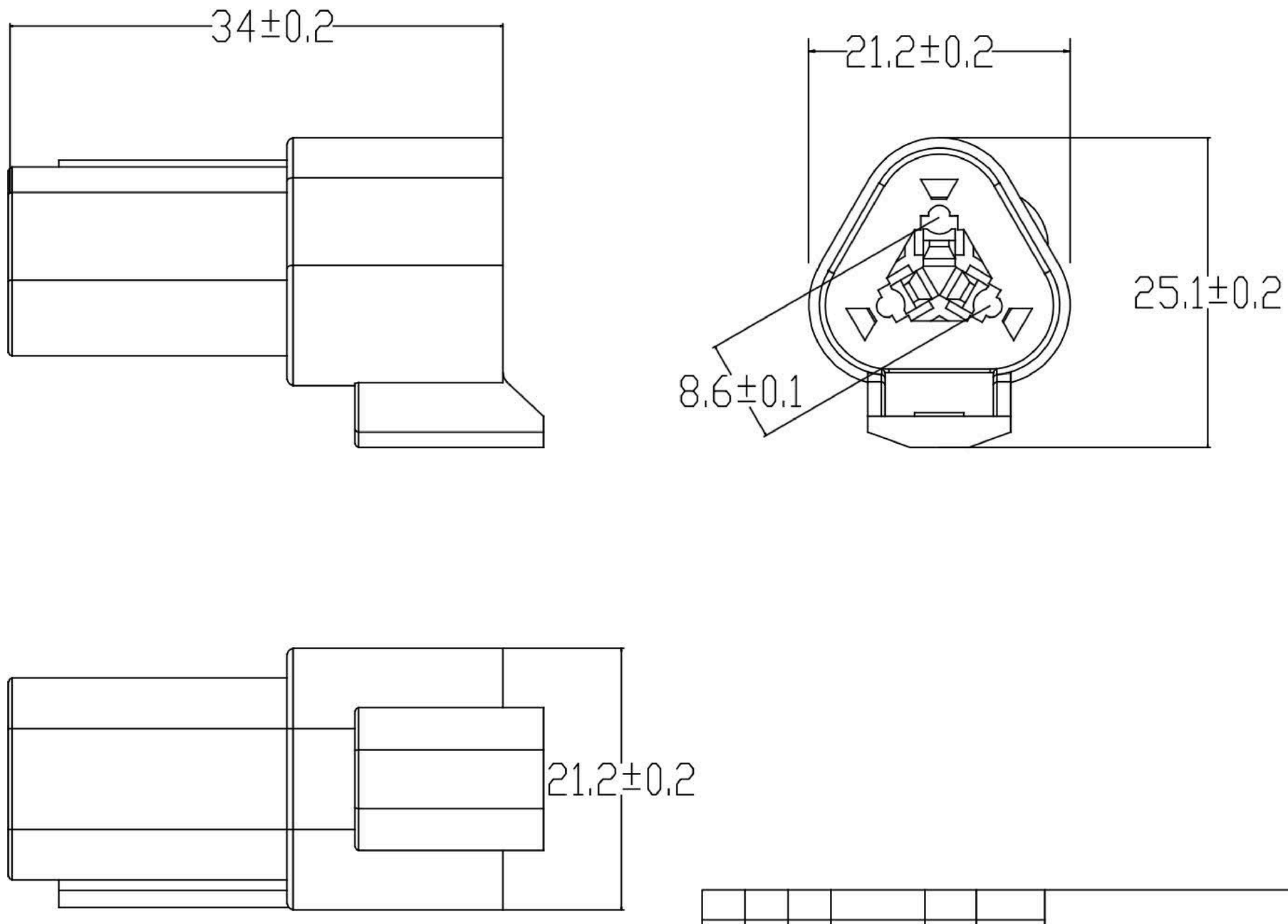


| | | | | | | | |
|---|---|---|---|---|---|---|---|
| | | | | | | Material serial number | DT06-3P |
| | | | Draw | 郑建兴 | 2018.5.23 | Scale | 1:1 |
| Checked | 阮旭勇 | 2018.5.23 | | | | | |
| | | | Approved | 吴鹏辉 | 2018.5.23 | | |

Material PA66

View