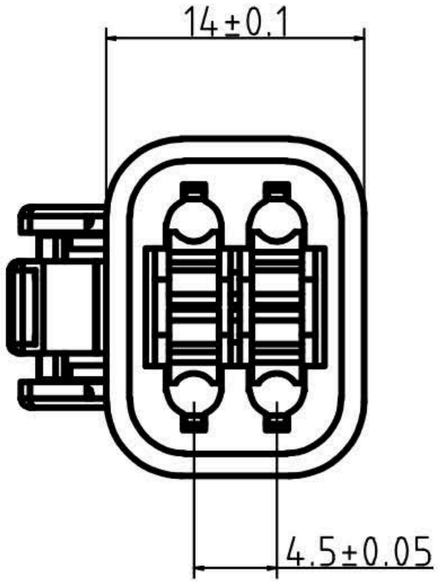

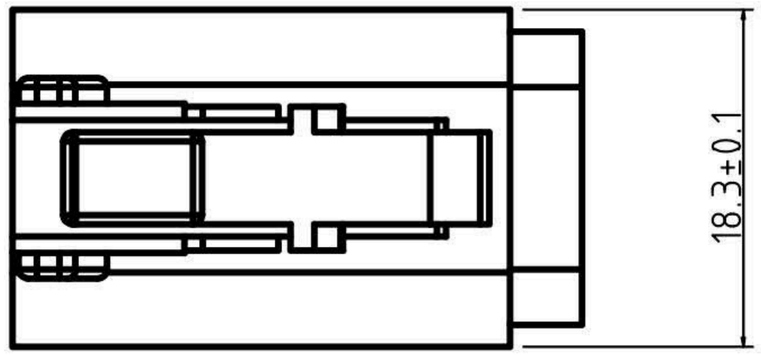

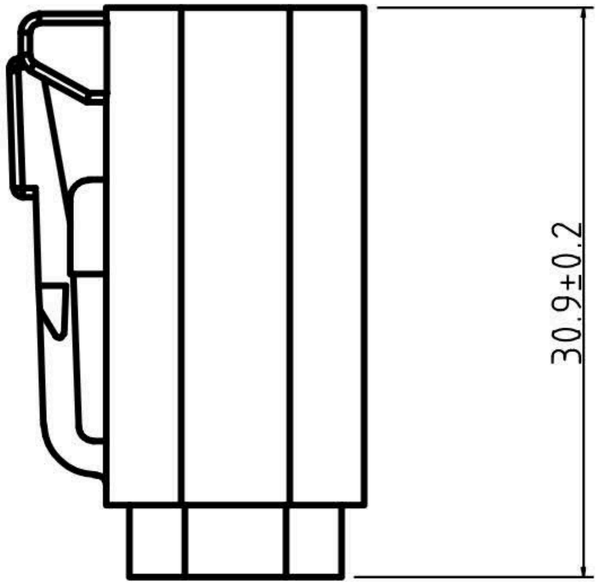

						Material serial number	DT06-4S		Material PA66
			Draw	郑建兴	2012.5.18		Scale		
							1:1		
Checked	阮旭勇	2012.5.18							
			Approved	吴鹏辉	2012.5.18			View	

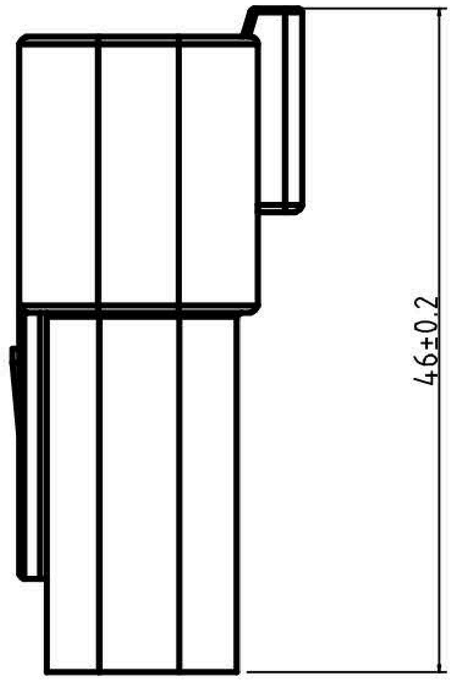

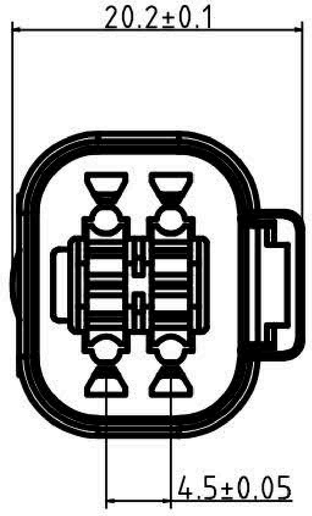

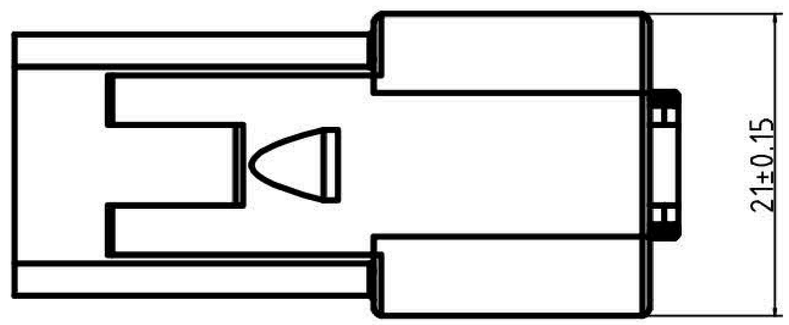

						Material serial number	DT04-4P		Material PA66
			Draw	郑建兴	2012.5.18			Scale	
Checked	阮旭勇	2012.5.18						1:1	
			Approved	吴鹏辉	2012.5.18			View	